Part 2-D) Installation with Tsukayu adaptive brackets & plates assembly kit

(v) Yamaha V-Star 950

Two hardware kits are needed: a) Q-TSU805P adaptive brackets kit; b) Q-TSU950 bracket plates assembly kit

Yamaha V-Star 1300

Two hardware kits are needed: a) Q-TSU805P adaptive brackets kit; b) Q-TSU1300 bracket plates assembly kit

Fig. 2-D-(v)-1

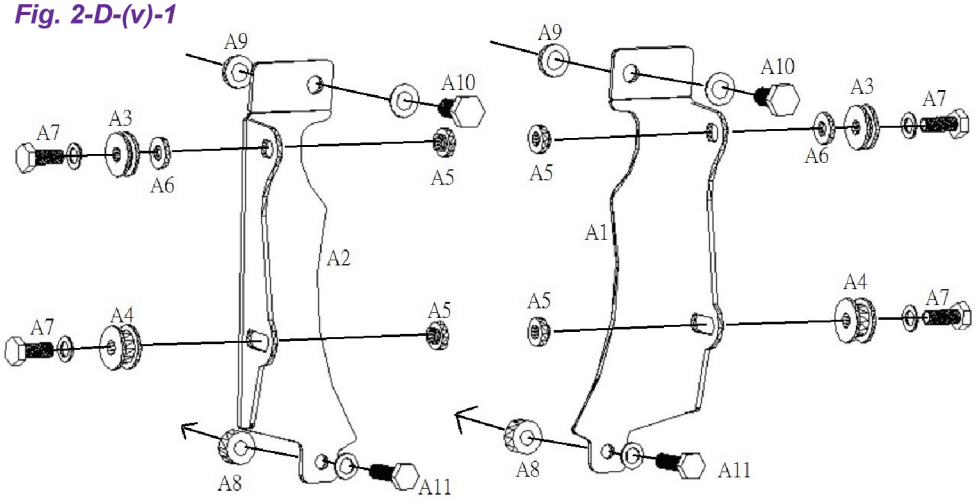

Q-TSU805p_ver2 includes:
A1)Q-TSU805_P1_ver2 left x 1pcs
A2)Q-TSU805_P1_ver2 right x 1pcs
A3)RK Spacer 7.6mm x 2
A4)RK Spacer 12.6mm x 2
A5)M8-MS_NUT (M8) x 4pcs
A6)Spacer 3mm(L), 8.5mm(I), 18mm(O) x 2pcs
A7)Bolt M8x20mm (HEX Head) x 4pcs
A8)Spacer 9.5mm(L), 8.5mm(I).19mm(O) x 2pcs
A9)Spacer 3mm(L), 10.5mm(I), 19mm(O) x 2pcs
A10)Bolt M10x20(Hex Head,1.25mm Pitch) x 2pcs
A11)Bolt M8x30mm(Hex Head) x 2pcs
A12)M10 Washer x 2pcs
A13)M8 Washer x 2pcs

Fig. 2-D-(v)-2

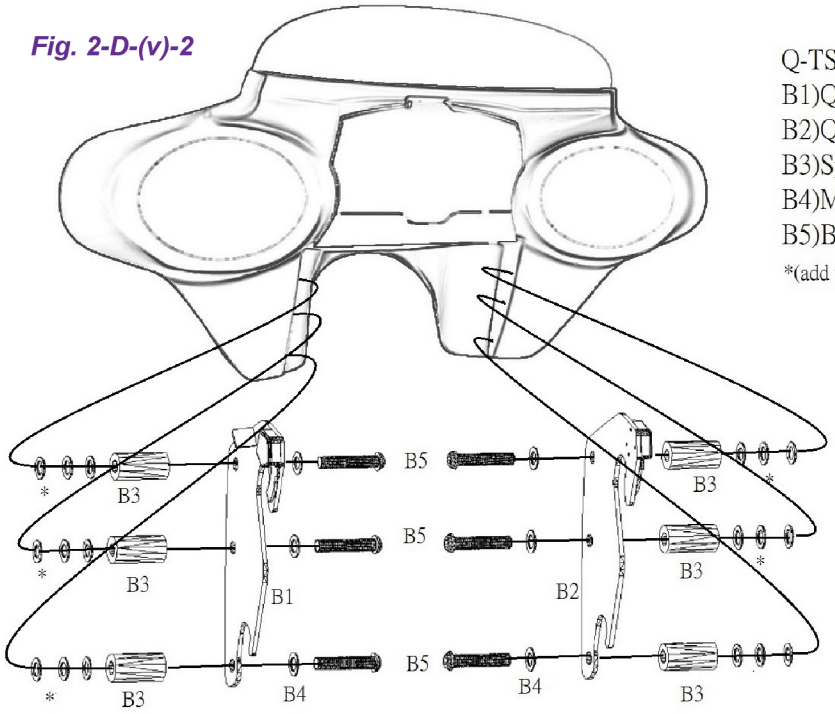

Q-TSU950) bracket plates kit includes:
B1)Q-TSU950 left x 1pcs
B2)Q-TSU950 right x 1pcs
B3)Spacer 33mm(L), 8.5mm(I), 18mm(O) x 6pcs
B4)M8 washer x 20
B5)Bolt M8 x 50mm (Round Head) x 6pcs
*(add washers if necessary)

Q-TSU1300) bracket plates kit includes:
B1)Q-TSU1300 left x 1pcs
B2)Q-TSU1300 right x 1pcs
B3)Spacer 33mm(L), 8.5mm(I), 18mm(O) x 6pcs
B4)M8 washer x 20 pcs
B5)Bolt M8 x 50mm (Round Head) x 6pcs

*Note: Refer to Step 3

Fig. 2-D-(v)-3

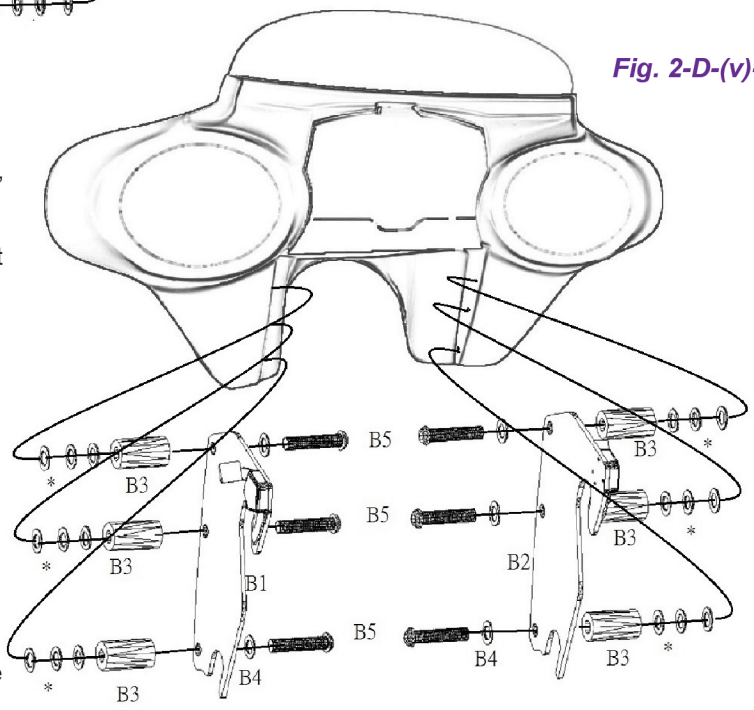

1. Cover gas tank and front fender with protective material.

2. Install the Q-TSU805p bracket assembly as shown in Fig.2-D-(v)-1, the turn signal bar should be removed temporarily (turn signal bar is not shown in the figure). Measure the distance between the slots on left and right quick release latches, this distance will be used to adjust the distance between the bracket plates on fairing, you need to measure it as accurate as possible, we suggest measuring in mm.

*3. Install the mounting plates assembly as shown in Fig.2-D-(v)-2 or 2-D-(v)-3. Add M8 washers if the distance of the two mounting plates doesn't perfectly match the distance between the two slots of Q-TSU805p. The spacers provided are close to what you need, but you may still need to add washers until they perfectly match, make sure you use same number of spacers and washers for all holes. Don't mix up Left and Right bracket plates, the latches come with the bracket plates. Try to put the fairing on, normally you will need to modify the number of washers several times until they match.

4. Now put the fairing on, you may need a helper for doing this step easier. Make sure the bracket plates are tightened securely. Latch the both side bracket plates securely. Tighten all the bolts on the fairing and all bolts on the whole mounting system.

Copyright © Tsukayu - All rights reserved